User Manual – AS5311-TS_EK_AB

AS5311

12-bit Linear Incremental Position Sensor with ABI and PWM output

Table of Contents

1 General Description 3
2 The AS5311 adapter board 4
2.1 Board description 4
2.2 Mounting the AS5311 adapter board 4
3 AS5311 adapter board and pinout 6
4 Operation 7
4.1 Standalone PWM output mode 7
5 Using the serial interface with MCU 8
5.1 3-wire serial interface 8
6 Kit content 9
7 AS5311 adapterboard hardware 10
7.1 AS5311-TS_EK_AB-1.1 schematics 10
7.2 AS5311-TS_EK_AB-1.1 PCB Layout 10
8 Copyright 11
9 Disclaimer 11
10 Contact Information 11

Revision History

Revision	Date	Owner	Description
1.0	01.10.2009		Initial revision
1.1	10.07.2013	azen	Updated to new template + minor corrections
1.2	03.11.2016	azen	Added 6. Kit content + minor corrections

1 General Description

The AS5311 is a contactless high resolution magnetic linear encoder for accurate linear motion and off-axis rotary sensing with a resolution down to <0.5µm. It is a system-on-chip, combining integrated Hall elements, analog front end and digital signal processing on a single chip, packaged in a small 20-pin TSSOP package.

A multipole magnetic strip or ring with a pole length of 1.0mm is required to sense the rotational or linear motion. The magnetic strip is placed above the IC at a distance of typ. 0.3mm.

The absolute measurement provides instant indication of the magnet position within one pole pair with a resolution of 488nm per step (12-bit over 2.0mm). This digital data is available as a serial bit stream and as a PWM signal.

Furthermore, an incremental output is available with a resolution of 1.95 µm per step. An index pulse is generated once for every pole pair (once per 2.0mm).The travelling speed in incremental mode is up to 650mm/second.

An internal voltage regulator allows the AS5311 to operate at either 3.3 V or 5 V supplies.

Depending on the application the AS5311 accepts multi-pole strip magnets as well as multi-pole ring magnets, both radial and axial magnetized.

For further technical details, please refer to the AS5311 datasheet, available for download from the ams website.

Figure 1:

AS5311 + Multi-pole strip magnet

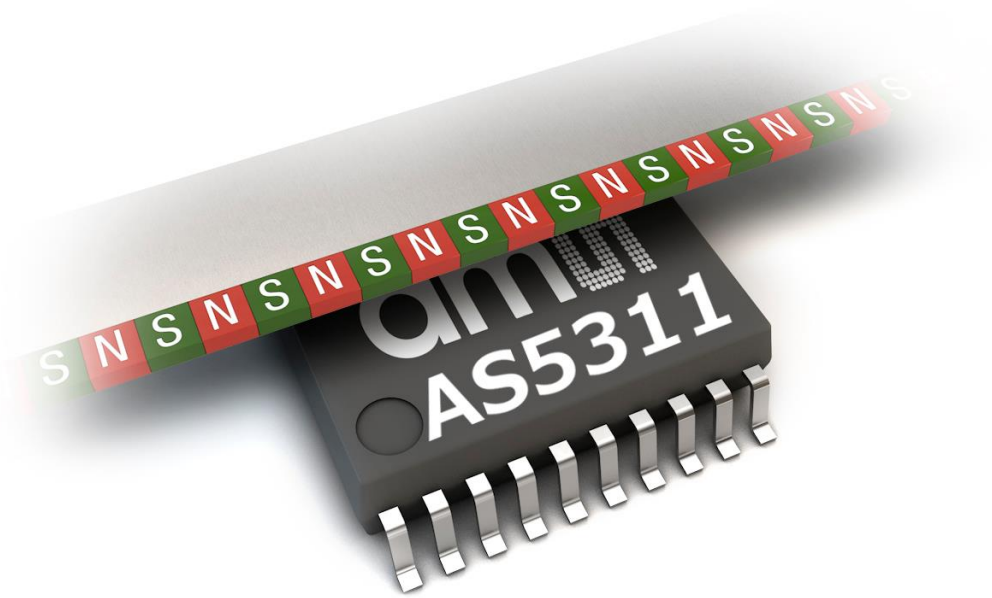

2 The AS5311 adapter board

2.1 Board description

The AS5311 adapter board is a simple circuit that allows testing and evaluating the AS5311 linear encoder quickly without having to build a test fixture or PCB.

The PCB can be used as standalone unit or attached to a microcontroller.
The standalone operation requires only a 5V or a 3V3 power supply, the magnet's position in a pole pair (2mm length) can be read on the PWM output, and the relative position on the incremental AB-Index outputs.

Figure 2:

AS5311 Adapterboard

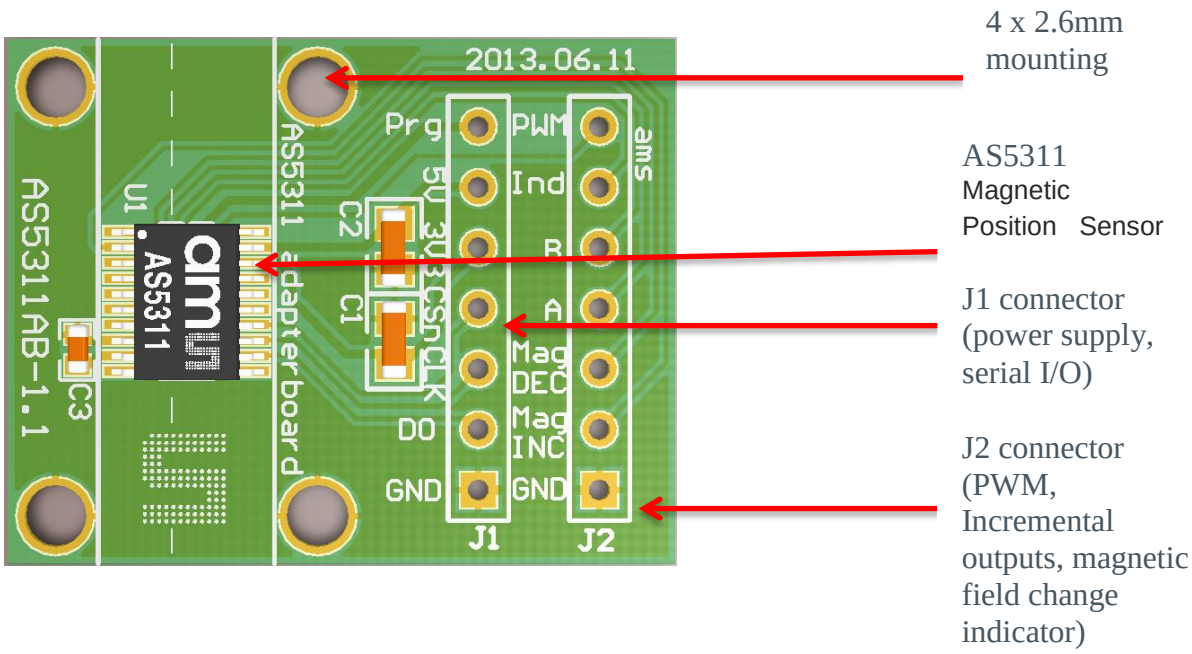

2.2 Mounting the AS5311 adapter board

The AS5311 uses magnetic multipole strip or ring magnets with a pole length of 1.0mm.

The airgap between the magnet and the AS5311 casing should be maintained in the range 0.2mm~0.4mm.

The magnet holder must not be ferromagnetic.

Materials as brass, copper, aluminum, stainless steel are the best choices to make this part.

Figure 3:

AS5311 adapter board mounting and dimension

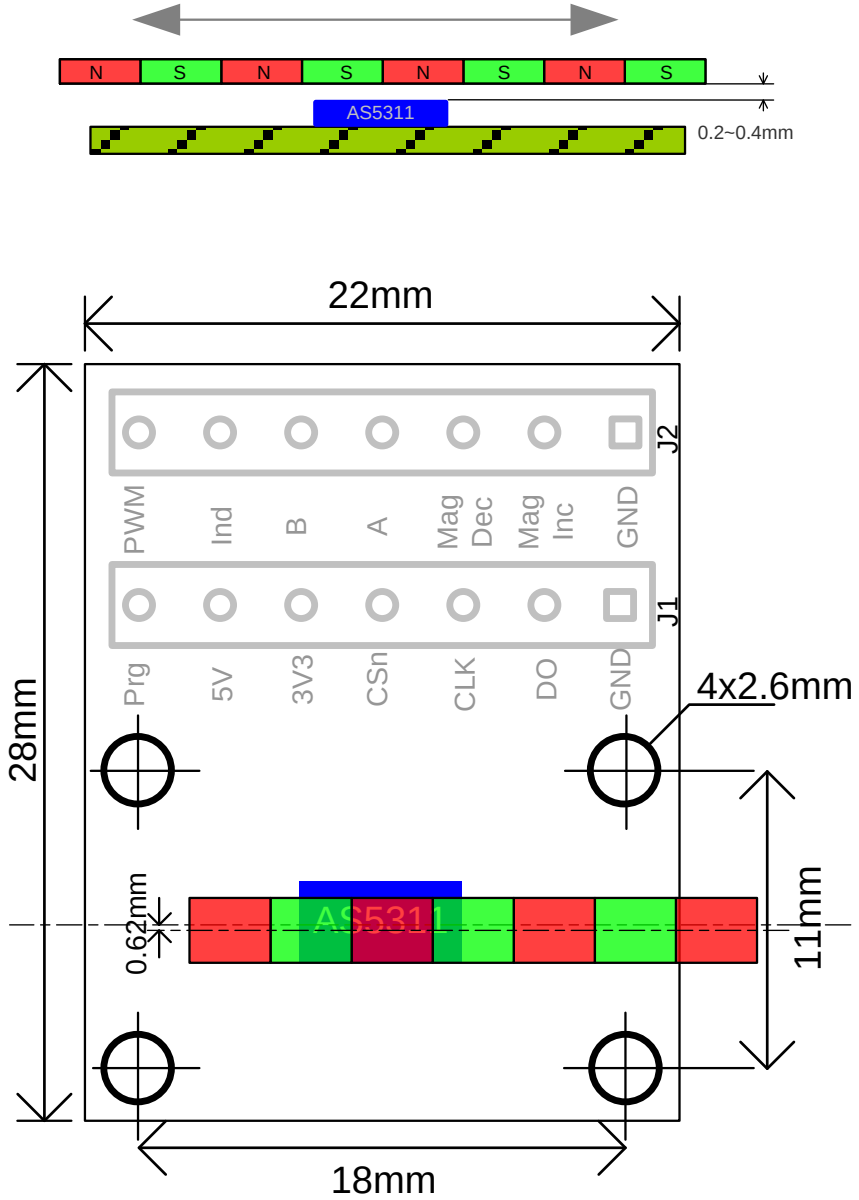

3 AS5311 adapter board and pinout

Figure 4:
AS5311 adapter board connectors and encoder pinout

Table 1:
Pin description

Pin# Board	Pin# AS5311	Symbol	Type	Description
JP1 - 1	8	GND	S	Negative Supply Voltage (VSS)
JP1 - 2	12	DO	DO_T	**D**ata **O**utput of Synchronous Serial Interface
JP1 - 3	13	CLK	DI, ST	Clock Input of Synchronous Serial Interface; Schmitt-Trigger input
JP1 - 4	14	CSn	DI_PU,ST	**C**hip **S**elect, active low; Schmitt-Trigger input, internal pull-up resistor (~50kΩ). Must be low to enable incremental outputs
JP1 - 5	18	3V3	S	3V-Regulator output; internally regulated from VDD5V. Connect to VDD5V for 3V supply voltage. Do not load externally.
JP1 - 6	19	5V	S	Positive Supply Voltage, 3.0 to 5.5 V
JP1 - 7	9	Prg	DI_PD	OTP **Prog**ramming Input for factory programming. Connect to VSS
JP2 - 1	8	GND	S	Negative Supply Voltage (VSS)
JP2 - 2	2	Mag Inc	DO_OD	Magnet Field **Mag**nitude **INC**rease; active low, indicates a distance reduction between the magnet and the device surface
JP2 - 3	3	Mag Dec	DO_OD	Magnet Field **Mag**nitude **DEC**rease; active low, indicates a distance increase between the device and the magnet.
JP2 - 4	4	A	DO	Incremental output A
JP2 - 5	5	B	DO	Incremental output B
JP2 - 6	7	Ind	DO	Incremental output Index.
JP2 - 7	15	PWM	DO	**P**ulse **W**idth **M**odulation of approx. 244Hz; 1µs/step

Pin types:

S:	supply pin	ST:	Schmitt-Trigger
DI:	digital input	DI_PU:	digital input / pull-up
DI_PD:	digital input / pull-down	DO:	digital output
DO T:	digital output / tri-state	DO OD:	digital output / open drain

4 Operation

4.1 Standalone PWM output mode

A PWM signal (JP2 pin #7) allows measuring the 12-bit absolute position value within one pole pair (2.0mm). The value is encoded into a pulse width modulated signal with 1µs pulse width per step and 5V pulse voltage can be connected to the capture/timer input of a microcontroller in order to decode the angle value.

Figure 5:

Using the PWM output with the adapter board

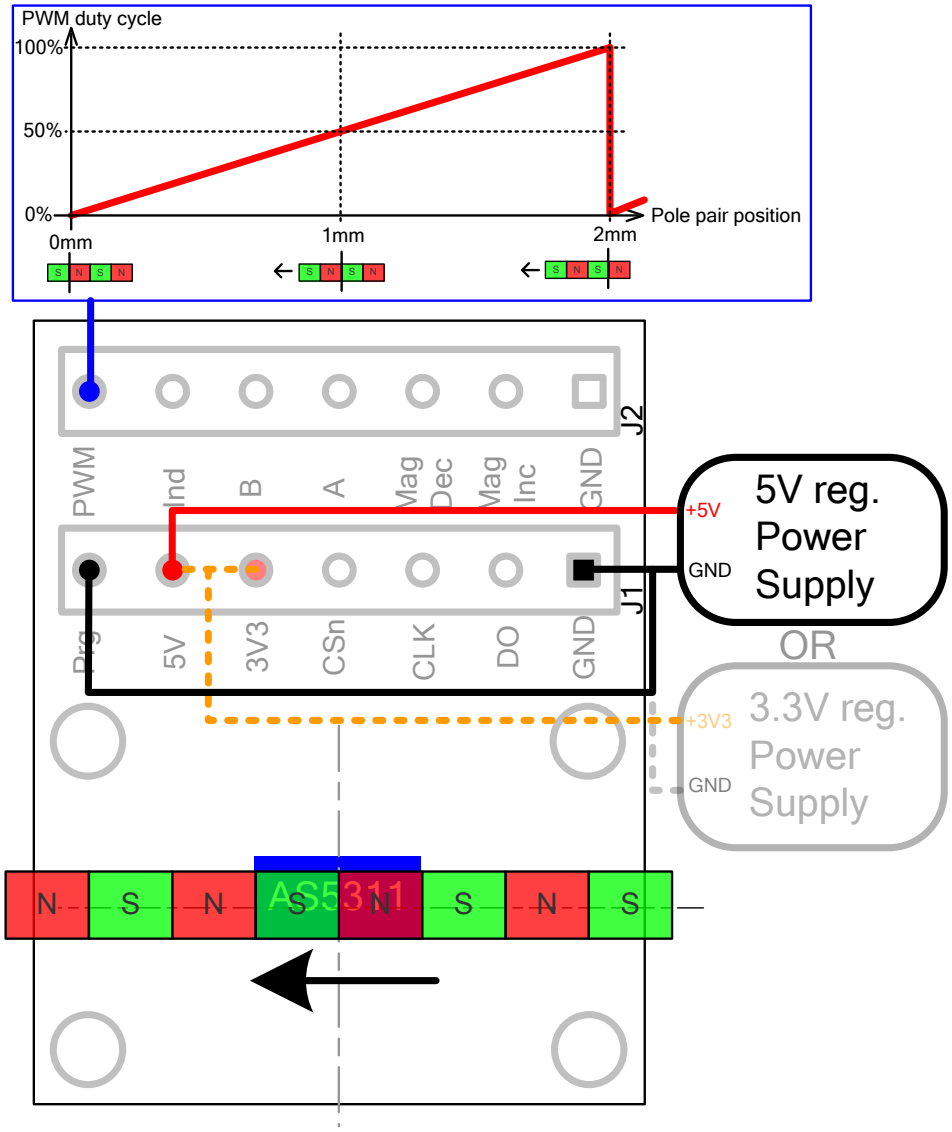

The absolute serial output counts from 0….4095 within one pole pair a repeats with each subsequent pole pair.

The PWM output starts with a pulse width of 1µs, increases the pulse width with every step of 0.488µm and reaches a maximum pulse width of 4097µs at the end of each pole pair. See AS5311 datasheet for more details on the PWM output.

The PWM frequency is internally trimmed to an accuracy of ±5% (±10% over full temperature range

Figure 6:

PWM duty cycle depending on magnet position

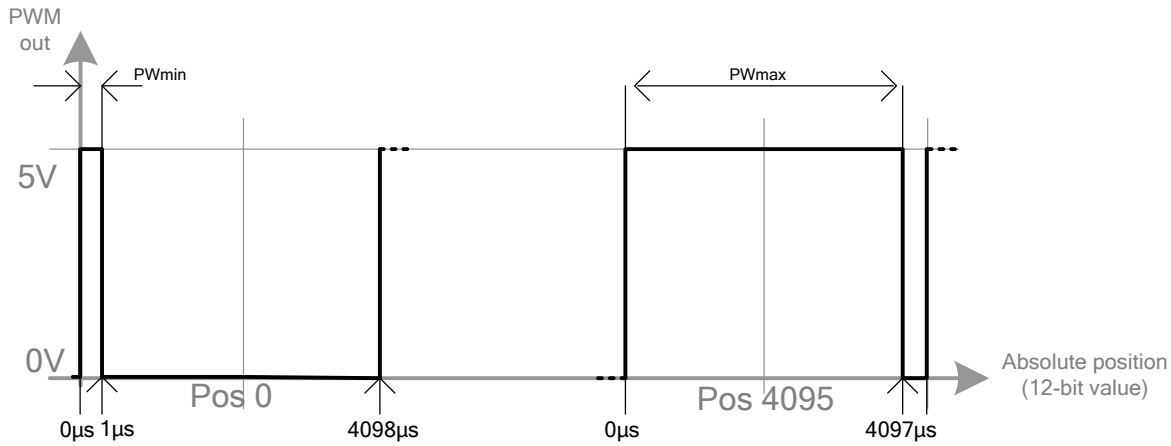

5 Using the serial interface with MCU

The most complete and accurate solution for a MCU to read the angle of a magnet is the serial interface.

The 12 bit value of the angle will be directly read, and some other indicators as magnetic field strength information or alarm bits can be read at the same time.

The connection between the MCU and the adapter board can be made with 3 wires.

5.1 3-wire serial interface

The Serial interface allows data transmission of the 12-bit absolute linear position information (within one pole pair = 2.0mm). Data bits D11:D0 represent the position information with a resolution of 488nm (2000µm / 4096) per step.

CLK must be high at the falling edge of CSn.

If CLK is low at the falling edge of CSn, the first 12 bits represent the magnitude information, which is proportional to the magnetic field strength.

Figure 7:
Bidirectional serial connection

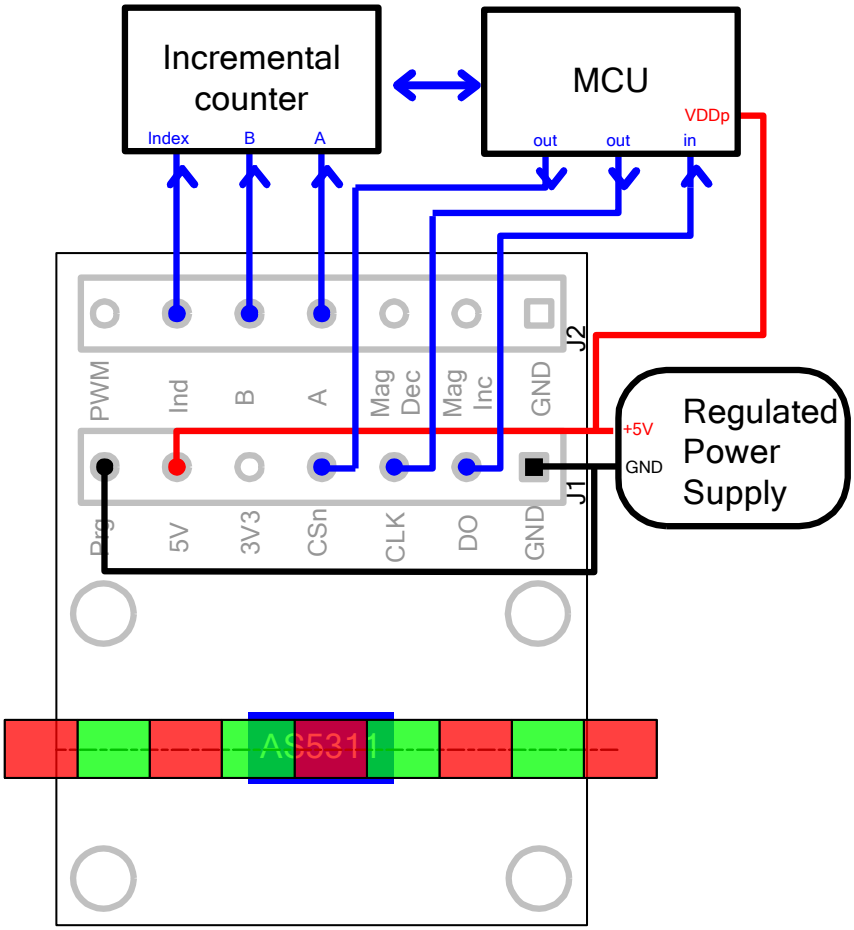

6 Kit content

Table 2:
Kit content

Name	Description	Qty
AS5311-TS_EK_AB	AS5311 Linear Encoder Adapterboard	1
AS5000-MS10-H075-100	Multipole Magnetstrip	1

7 AS5311 adapterboard hardware

Below the schematic and layout of the adapter board can be found.

7.1 AS5311-TS_EK_AB-1.1 schematics

Figure 8:

AS5311-AB-1.1 adapterboard schematics

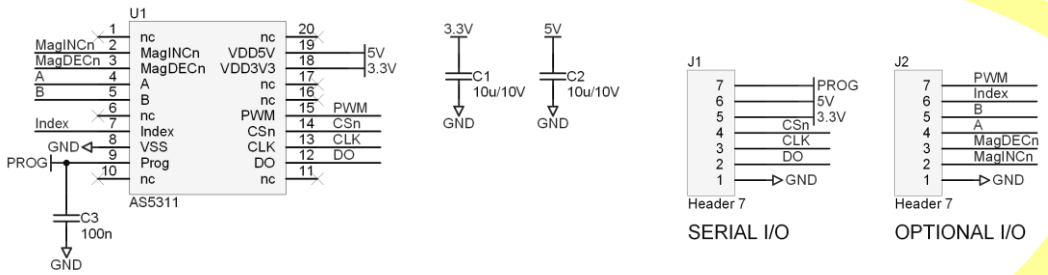

7.2 AS5311-TS_EK_AB-1.1 PCB Layout

Figure 9:

AS5311-AB-1.1 adapter board layout

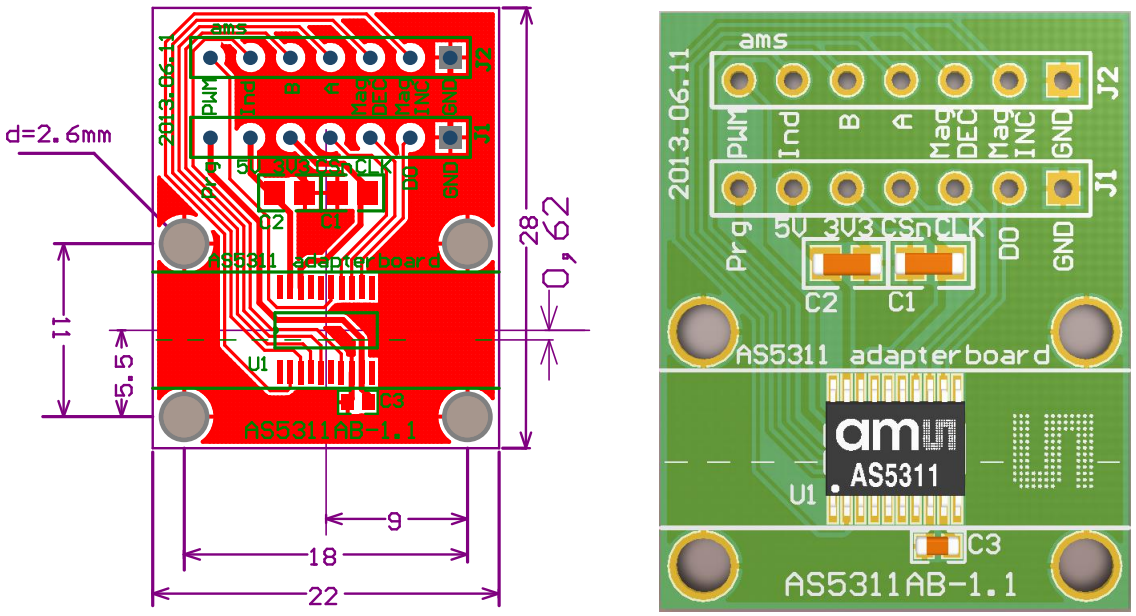

8 Copyright

Copyright ams AG, Tobelbader Strasse 30, 8141 Unterpremstätten, Austria-Europe. Trademarks Registered. All rights reserved. The material herein may not be reproduced, adapted, merged, translated, stored, or used without the prior written consent of the copyright owner.

9 Disclaimer

Devices sold by ams AG are covered by the warranty and patent indemnification provisions appearing in its Term of Sale. ams AG makes no warranty, express, statutory, implied, or by description regarding the information set forth herein. ams AG reserves the right to change specifications and prices at any time and without notice. Therefore, prior to designing this product into a system, it is necessary to check with ams AG for current information. This product is intended for use in commercial applications. Applications requiring extended temperature range, unusual environmental requirements, or high reliability applications, such as military, medical life-support or life-sustaining equipment are specifically not recommended without additional processing by ams AG for each application. This Product is provided by ams “AS IS” and any express or implied warranties, including, but not limited to the implied warranties of merchantability and fitness for a particular purpose are disclaimed.

ams AG shall not be liable to recipient or any third party for any damages, including but not limited to personal injury, property damage, loss of profits, loss of use, interruption of business or indirect, special, incidental or consequential damages, of any kind, in connection with or arising out of the furnishing, performance or use of the technical data herein. No obligation or liability to recipient or any third party shall arise or flow out of ams AG rendering of technical or other services.

10 Contact Information

Headquarters

ams AG

Tobelbader Strasse 30
8141 Unterpremstaetten

Austria

T. +43 (0) 3136 500 0

For Sales Offices, Distributors and Representatives, please visit:
http://www.ams.com/contact

Mouser Electronics

Authorized Distributor

Click to View Pricing, Inventory, Delivery & Lifecycle Information:

ams OSRAM:

AS5311-TS_EK_AB